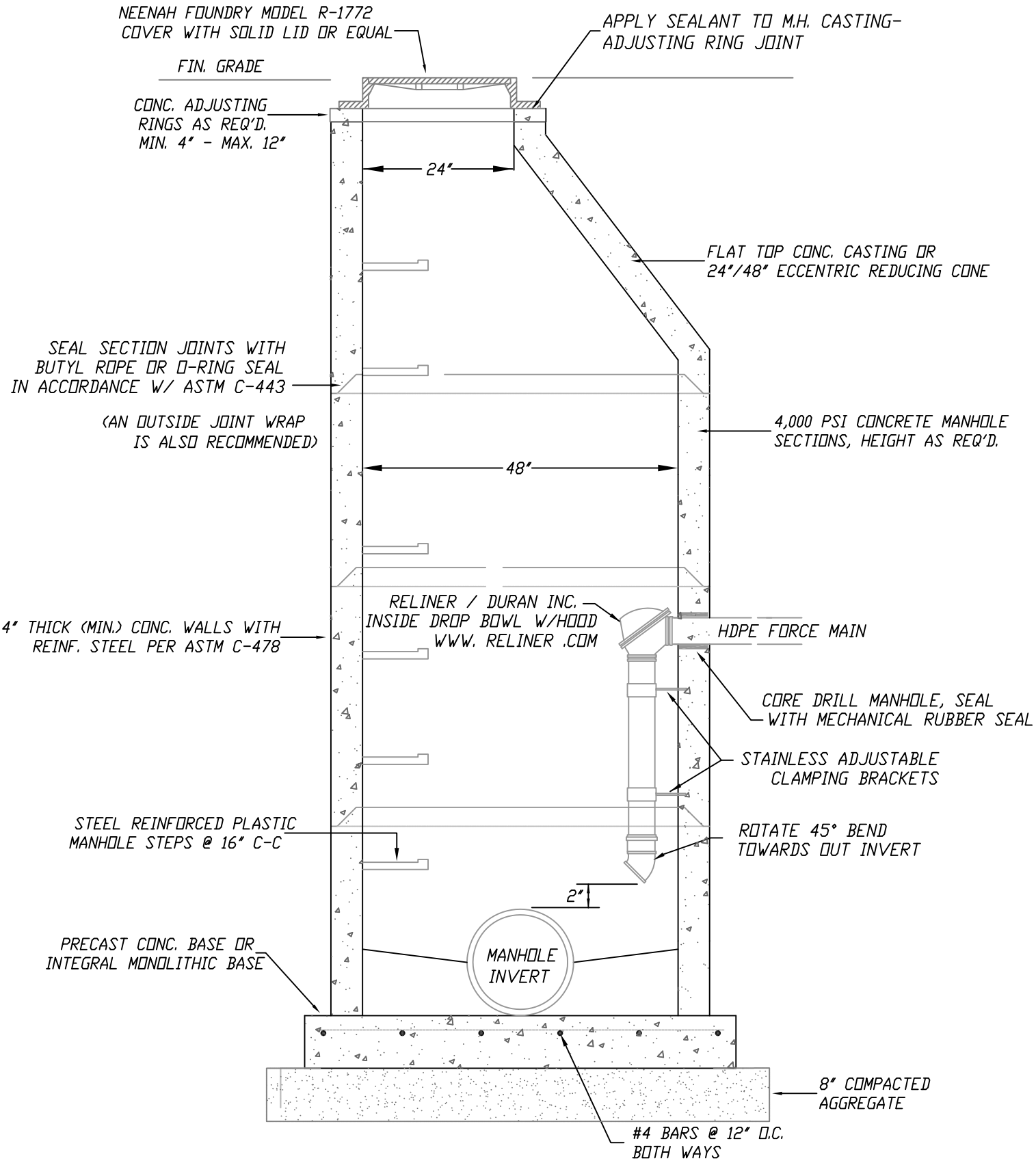

FOR USE WHEN THE INVERT OF AN INCOMING FORCE MAIN IS 24" OR MORE ABOVE THE MANHOLE INVERT.

HDPE FORCE MAIN CONNECTION DETAIL

N.T.S.